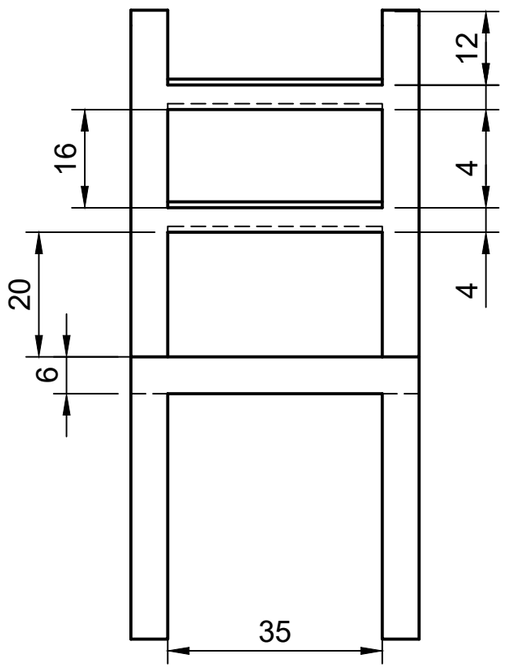

FRONT VIEW

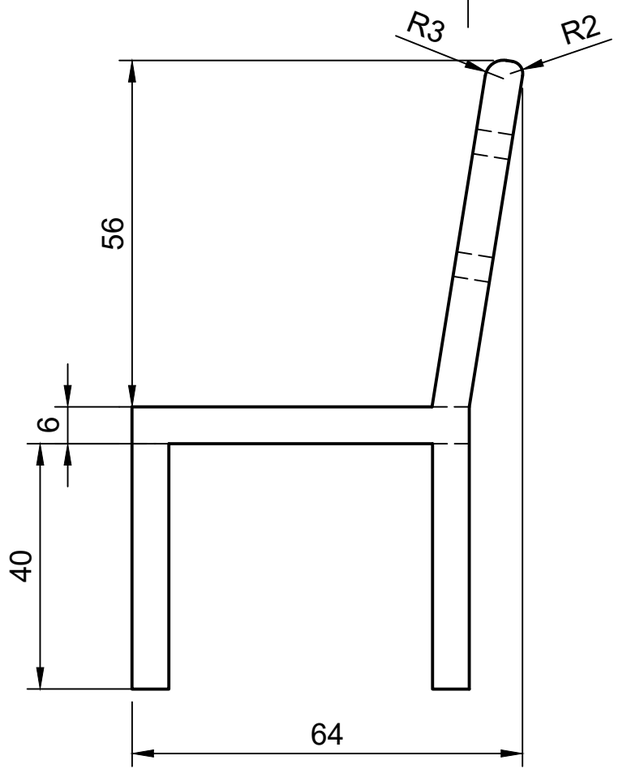

SIDE VIEW

Parts List			
Item	Part Name	Material	Mass
1	7- CREATE 3D MODEL FROM ORTHOGRAPHIC PROJECTION.	Steel	212.394 g

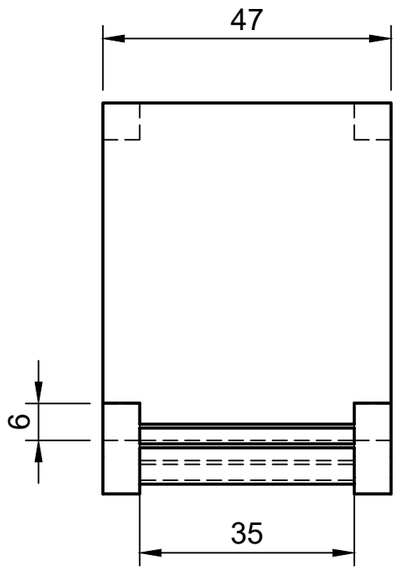

TOP VIEW

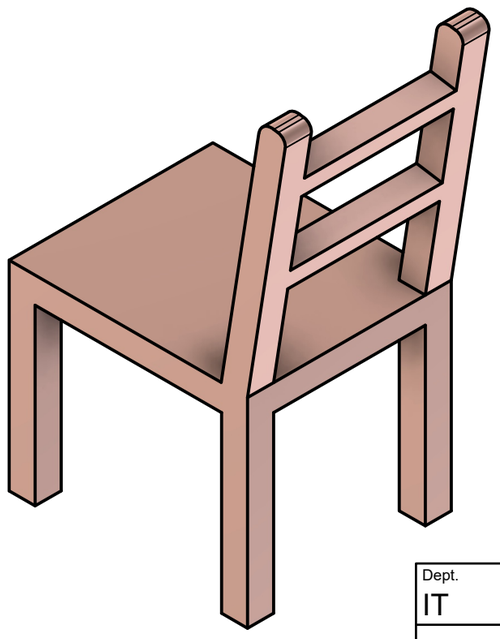

Dept.	Technical reference	Created by	Approved by
IT	212225220086	RITIKA S	Dr SARAVANAN
		Document type: ORTHOGRAPHIC	Document status
		Title: 7- CREATE A 3D MODEL FROM ORTHOGRAPHIC PROJECTION	DWG No.
			Rev. 3.3 / Date of issue 11-02-2026 / Sheet 7/11